Technical Data:

Material:

- Contact(metal housing): Brass Machined
- Terminal screw: Steel Galvanized and chromatized
  or Nickel plated or Tin plated(standard)(option)M2
- Wire guard: PhBz,tin plated.
- Insulator body(housing): Polyamide(Glass filled)(UL94V-0)

Electrical

- Voltage rating:300V
- Current rating:10Amps
- Contact resistance: 20mΩ (max)
- Insulation resistance: 5000MΩ /1000V
- Withstanding Voltage: 1600VAC(1min) Test time=60sec/1pcs
- Wire range: 16-28AWG

Mechanical:

- Torque: 2kgf.cm/M2
- Operating temperature: -33°C to +120°C

Safety approvol data:

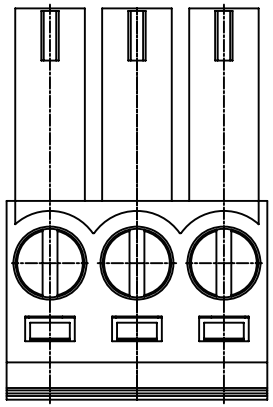

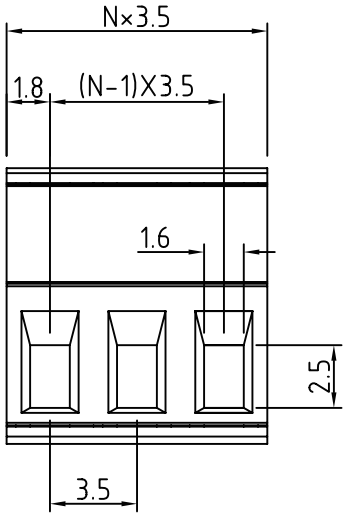

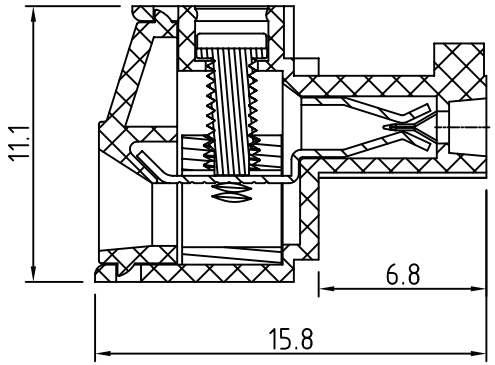

N=Number of contacts

AAACONN

AAA (HK) Electronics Co., Ltd.

www.aaaconnectors.com

RoHS Compliant

DRAWING BY		TOLERANCES ARE
CHECKED BY		X. ± .X ± 0.30 .XX ± 0.10 .XXX ± ANG ±
UNIT / mm	SCALE 1 : 1	
DATE		
SIZE A4	PPOJECTION	

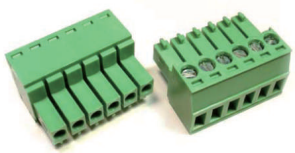

ORDER INFORMATION

TBP180-350-xx-x

SERIES

PITCH : 3.50mm

POLES : 02-24

INSULATOR COLOR : 1=GREEN, 2=BLACK, 3=BLUE, 4=GREY

Description: Terminal Block Plug Female Sockets 180° Free Hanging (In-Line) 3.50mm